Arbiton
FLOOR EXPERT

FLOOR PROFILES

MORE THAN ...
just profiles

Innovation, quality and know-how – since 1994 we've been investing in knowledge, technology and our machinery park.

We aim to become market LEADER wherever we are present.

MORE THAN...

...DESIGN

Every year A.DESIGN studio analyzes trends, changes in consumer preferences and hundreds of new floor colors. That's why we can create customer orientated solutions.

...TECHNOLOGY

Our inhouse floor laboratory is testing hundreds of floors from all major manufacturers to improve our accessories and create functional floor system. That's why, we know the strongest and weakest points of all types of floors.

...MANUFACTURE

We are an European leader for production of floor accessories. Our technological development allows us to offer great portfolio of products.

We try harder,
we are the
FLOOR EXPERT

COLOR SYSTEM

4 most universal shapes and 34 colors matched
for the most popular floors and Arbiton skirting boards.

		Width	Wood	Anode	Inox	Screw fix	Glue fix	Max dilatation	Max leveling	Page
COLOR SYSTEM PROFILES										
	CS30	30 mm	+	+	-	+	+	24 mm	6 mm	14
	CS37	37 mm	+	+	-	+	+	31 mm	17 mm	15
	CS22	22 mm	+	+	-	+	+	16 mm	-	16
NEW	CS25	25 mm	+	+		+	+	20 mm	-	17

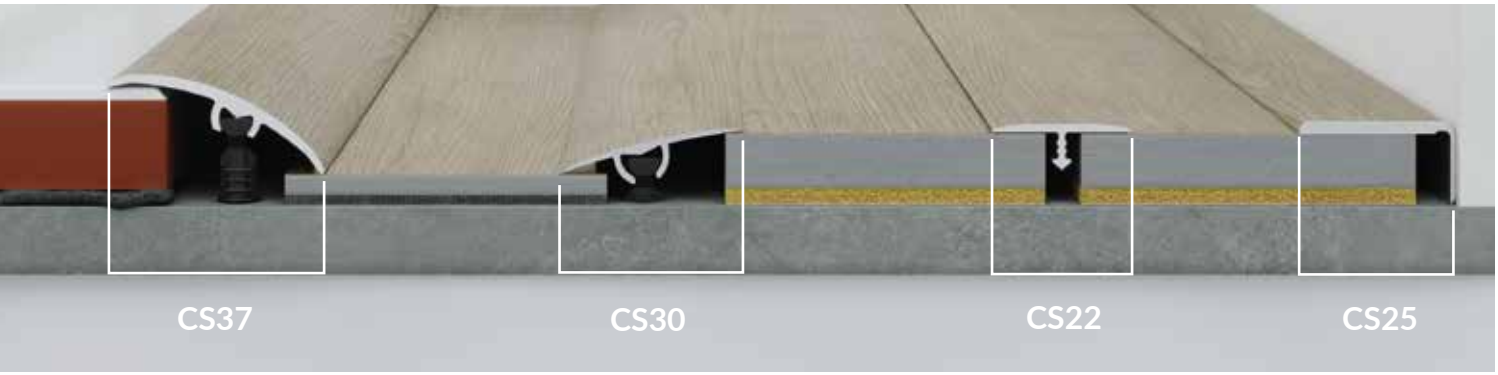

PRO SYSTEM

Precise, minimalistic solution for professionals, 7 shapes correspond to 99% of needs.

		Width	Wood	Anode	Inox	Screw fix	Glue fix	Max dilatation	Max leveling	Page
LEVELING PROFILE FOR MISMATCHING FLOORS										
	PRO20	20 mm	-	-	+	-	+	10 mm	-	24
	PRO T	22mm	-	-	+	-	+	16 mm	-	25
	PRODUO22	22 mm	-	-	+	+	+	16 mm	-	26
	PRO26	26 mm	-	-	+	-	+	10 mm	6 mm	27
NEW	PRO38	38 mm	-	-	+	-	+	32 mm	16 mm	28
	PRODUO38	38 mm	-	-	+	+	+	32 mm	16 mm	29
	PRO L	15/20 mm	-	-	+	-	+	15 mm	-	30

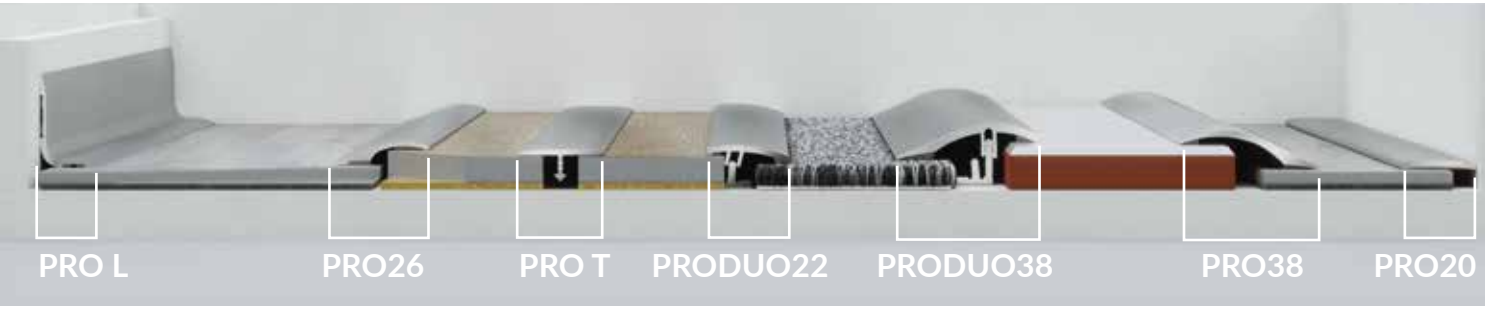

COMPLEMENTARY OFFER

Traditional shapes, proven solutions.

	Width	Wood	Anode	Inox	Screw fix	Glue fix	Max dilatation	Max leveling	Page
FOR THE FLOORS AT THE SAME LEVEL									
T16	16 mm	+	+	-	-	+	10 mm	-	34
FL16	16 mm	+	-	-	-	+	10 mm	-	35
SM1	30 mm	+	+	-	+	-	24 mm	-	36
PR3	30 mm	-	+	-	+	-	24 mm	-	37
PR3K	30 mm	+	+	-	-	+	24 mm	-	38
LEVELING PROFILE FOR MISMATCHING FLOORS									
PR8	38 mm	-	+	-	+	-	32 mm	10 mm	39
SM2	41 mm	+	+	-	+	-	35 mm	13 mm	40
SM3	47 mm	+	+	-	+	-	41 mm	17 mm	41
PR4	48 mm	-	+	-	+	-	42 mm	14 mm	42
PR10	70 mm	-	+	-	+	-	64 mm	10 mm	43
STAIRS PROFILES									
CS2	25 mm	+	+	-	-	+	-	-	44
PS2	25 mm	-	+	-	+	-	-	-	45
PS8	40 mm	-	+	-	+	-	-	-	46
PS6	46 mm	-	+	-	+	-	-	-	47

FOUR GROUPS OF PROFILES DEPENDING ON THE PURPOSE

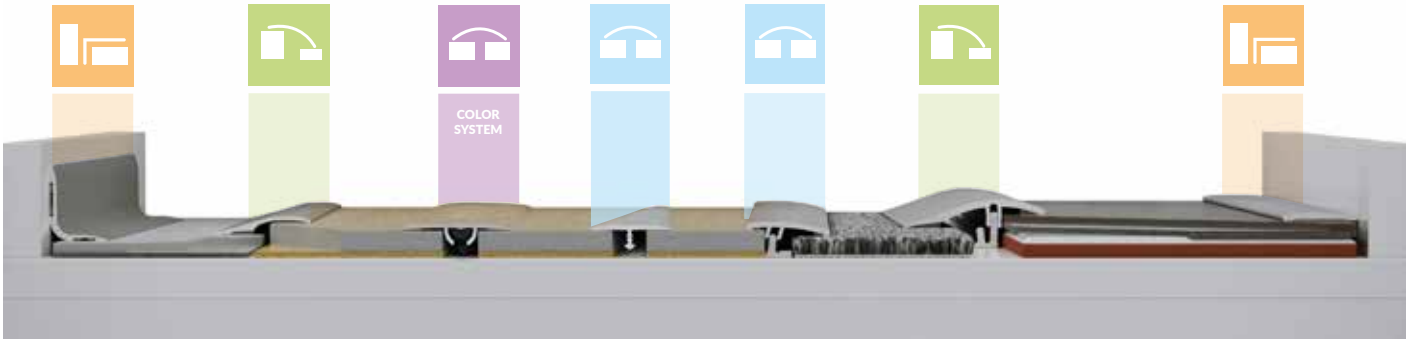

DILATATION PROFILES

FLOOR AT THE SAME LEVEL

They are used to connect floors at the same level. You can connect with them any type of floor, eg with a ceramic tiles. A wide range of colors allows you to match color to any floors.
You can also choose a profile in silver or titanium.

LEVELING PROFILES

FLOORS AT DIFFERENT LEVEL

They are used to connect floors with different level. The differences are usually small, several millimeters, however, to aesthetically eliminate them it is necessary to choose the right profile.

FINISHING PROFILES

They are used to finish the floors, mask the dilatation gap, in places where it is not covered eg by skirting board. It's about niches at the entrance or balcony door.

STAIRS PROFILES

They are used to finish the edges of steps.
Some profiles of this type have an additional layer non-slip to ensure a safe finish stairs.

SYMBOLS

MAX DILATATION ___ mm

MAX DILATATION: __mm
This information shows maximum gap between floors, that particular profile can cover. For floor dilatation – look floor producers recommendations.

MAX LEVELING ___ mm

MAX LEVELING: __mm
This information shows maximum height difference between floors, that particular profile can cover. When calculating the height, always count the whole flooring system – floor + underlay/glue.

SUPER FLAT

SUPER FLAT
From designers point of view, best profile is the flattest and smoothest one. Arbiton delivers new, extra flat solution, perfect even for the most demanding clients.

SCREWS SAFE FOR DIY

SCREWS - SAFE FOR DIY
Traditional, metal screws can easily damage the profile during installation. Also visible screw head appears on surface of the profile. With Arbiton screws floor profiles can be installed with no worries, even without any experience - perfect for DIY.

PROFI SOLUTION

PROFI SOLUTION
Profiles for the most demanding clients. Professional assembly systems, narrow and extra flat solutions.

INOX COLOR

INOX COLOR
New Arbiton color. Inox is a brushed steel in two shades. Perfect match to house fittings like door or window handles.

DILATATION GLUE

DILATATION GLUE
Special hot melt glue formula for profiles. Floor profile stays strongly fitted but allows floor to expand and contract.

SILICONE BARIER

SILICONE BARRIER
Silicone layer added to all Arbiton screw fix profiles, to protect against dirt getting under the profile.

COLOR SYSTEM

THE MOST UNIVERSAL SYSTEM OF FLOOR PROFILES

There are 34 colors matched to the best-selling laminated panels and LVT / RIGID floors in color system, created to fullfill all DIY customer needs.

The offer is directed to self-service points and professionals looking for the perfect color matching.

COLOR SYSTEM is the certainty of a good choice.

PERFECTLY MATCHED PROFILE AND SKIRTING BOARDS

The choice of accessories has never been so simple. Now you can choose a skirting boards and profile in the same color.

COLOR SYSTEM PROFILES are matched to all slats from the INDO, LARS and MACK collections

INDO

LARS

MACK

VIGO

40 I White
RAL 9010

25 I Snow Oak

19 I Ontario Oak

41 I Girona Oak

16 I Caucasian Oak

42 I Bolton Oak

26 I Buffalo Oak

34 COLORS

43 I Platinium Oak

46 I Philadelphia Oak

52 I Anthracite
RAL 7016
NEW

MATCHED TO POPULAR WINDOWS

44 I Sandy Oak

04 I Lingburg Oak

09 I Manorial Oak

47 I Antique Oak

07 I Liberty Oak

30 I Davos Oak

48 I Selma Oak

03 I Loft Oak

20 I Burgos Oak

29 I Santana Oak

50 I Canberra Oak

31 I Odessa Oak

32 I Nebraska Oak

27 I Boston Oak

02 I Northern Ash

39 I Corona Oak

11 I Holm Oak

12 I Dark Oak

49 I Tasmanian Oak

14 I Wenge Africa

23 I Modena Oak

45 I Concrete

A1 I Silver

A2 I Gold

A3 I Titanium

COLOR SYSTEM

PERFECT MATCH

INDO

PERFECTLY IMITATING THE REAL WOOD

LARS

THE IDEAL COLOUR AND DESIGN MATCH

MACK

WIDE INSTALLATION CHANNEL

VIGO

NEW

PROFILE AND SKIRTING
IN ONE COLOR MATCHED TO THE FLOOR

	40	52	25	19	41	16
INDO	01, 40			25	19	16
LARS	40			25		16
MACK	40			25, 107		16
VIGO	01	09		102		

	42	26	27	02	43	46
INDO		103		02	135	131
LARS					44	
MACK	107	02			135	131
VIGO					43	

	48	03	20	44	04	09
INDO	140	03, 42	20		04	10
LARS	50	03, 42			04, 45	46
MACK		03	03	42	04	46
VIGO		158	20			160

	47	07	30	29	50	31
INDO	07	154		06, 139		05, 09
LARS	-			09		
MACK	136	154		86, 132		
VIGO		160	159			163

	32	39	11	12	49	14
INDO	32		11	12	140	14
LARS	32, 47			12		14
MACK	29					
VIGO						

	23	45	A1	A3
INDO	23	33	41	
LARS			41	
MACK			41	
VIGO				

COLOR SYSTEM

DILATATION

LEVELING

5IN1 COLOR SYSTEM UNIVERSAL

FINISHING

DAMP-PROOF BARIER

SPECIAL GLUE WITH SILICONE PROVIDES DAMP-PROOF SYSTEM

CONNECTOR

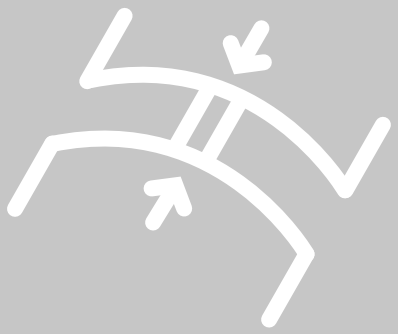

COLOR SYSTEM

UNIVERSAL PROFILES

CS30

CS37

CS30

PREVIOUS NAME **CS3**

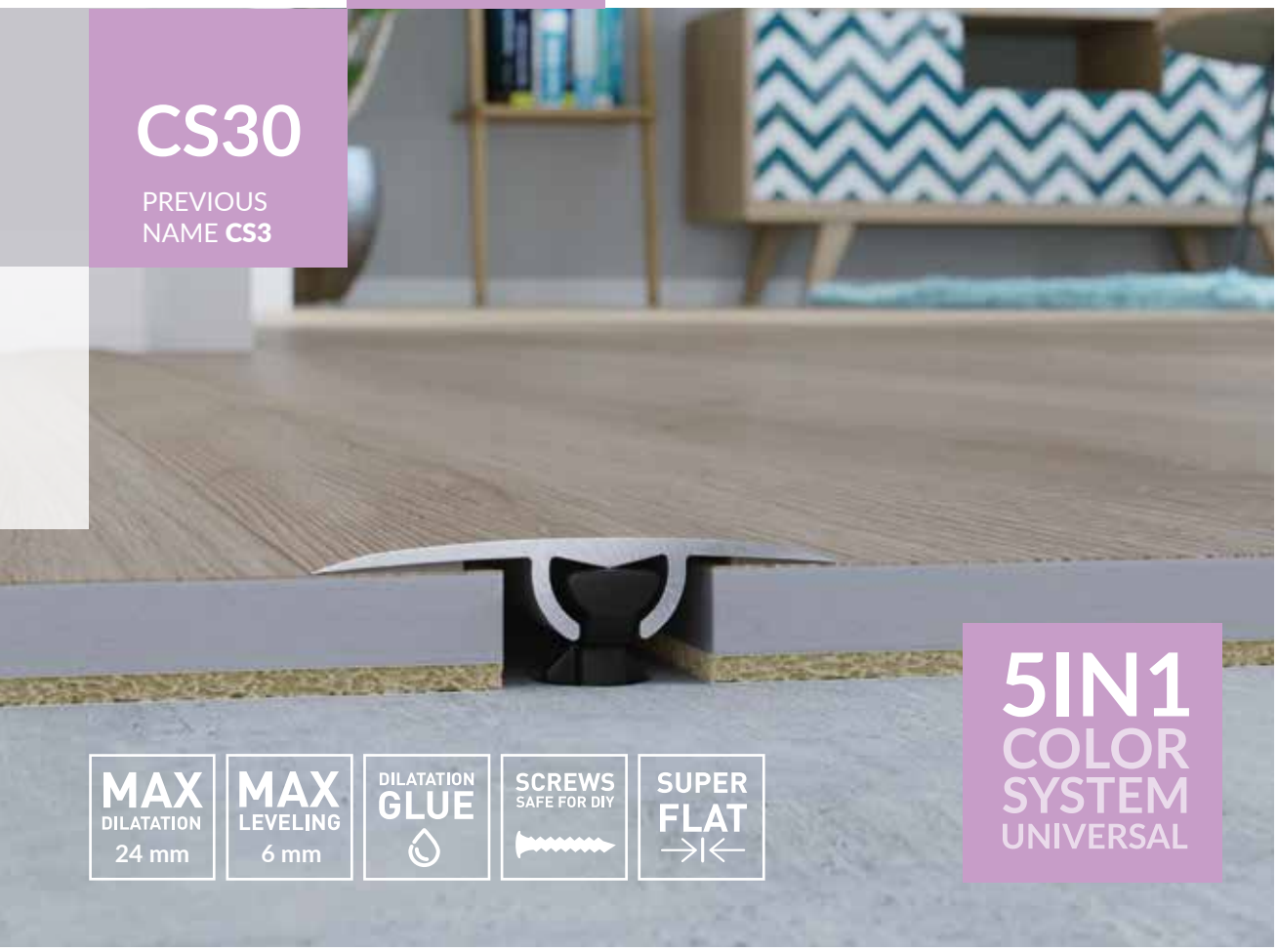

DIMENSIONS

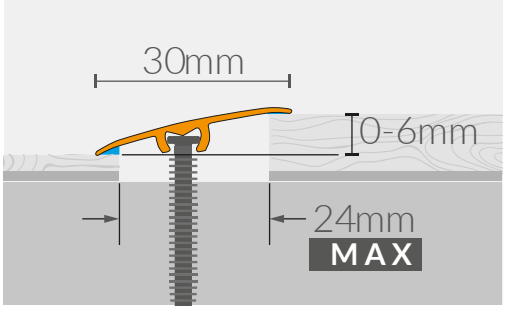

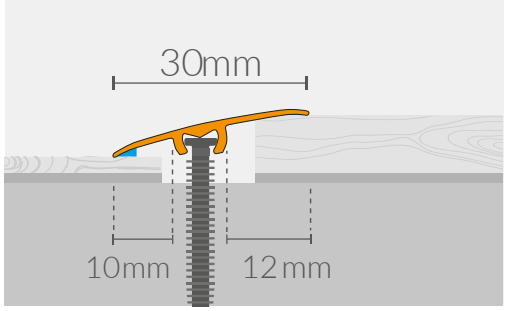

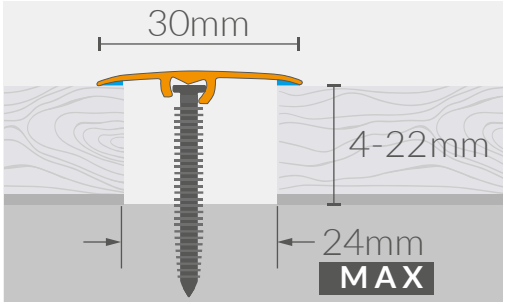

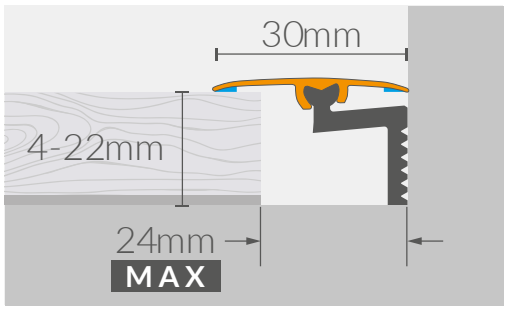

37 mm
5IN1
COLOR
SYSTEM
UNIVERSAL
CS37
PREVIOUS
NAME CS1
SCREWS
SAFE FOR DIY
DILATATION
GLUE
MAX
LEVELING
17 mm
MAX
DILATATION
31 mm

DIMENSIONS

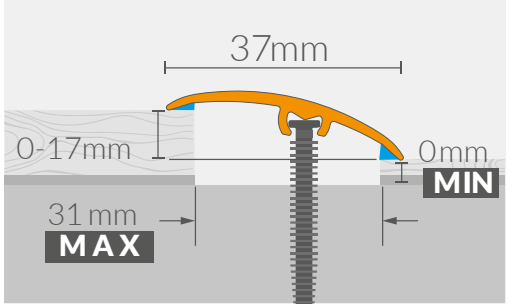
37mm
0-17mm
0mm
MIN
31 mm
MAX

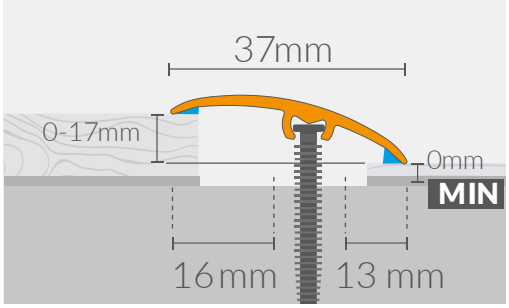
37mm
0-17mm
0mm
MIN
16 mm
13 mm

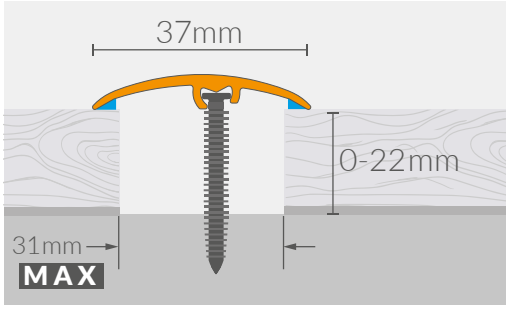
37mm
0-22mm
31mm
MAX

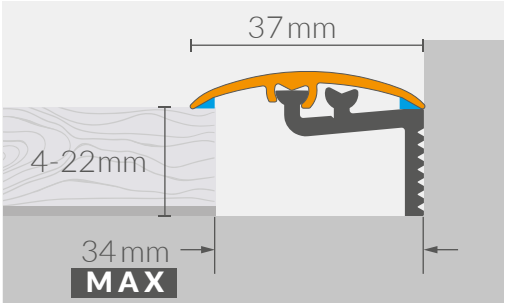
37 mm
4-22mm
34 mm
MAX

CS22

22 mm

GLUE FIX

DIMENSIONS

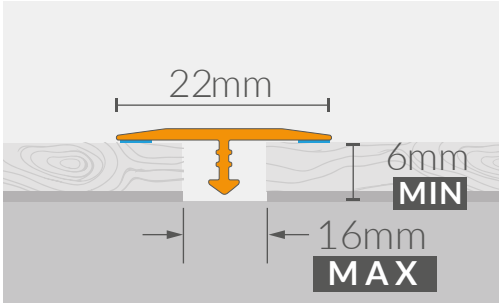

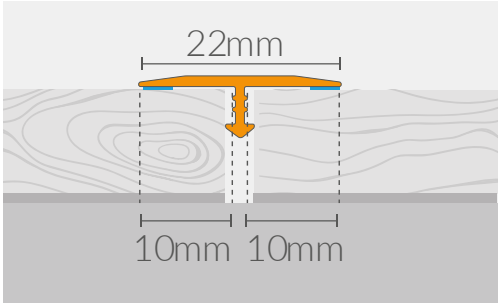

25 mm
GLUE FIX
CS25
NEW
SILICONE BARIER
MAX
DILATATION
20 mm

DIMENSIONS

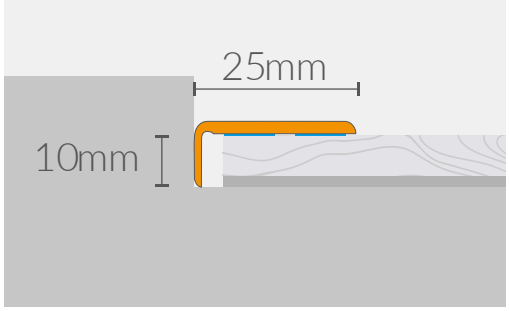
25mm
10mm

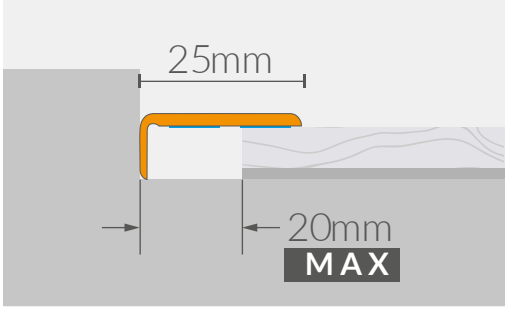
25mm
20mm
MAX

COLOR SYSTEM

CS22

COLOR	1,86 m
A1	5905167815496
A2	5905167815502
2	5905167815519
3	5905167815526
4	5905167815533
7	5905167815540
9	5905167815557
11	5905167815564
12	5905167815571
14	5905167815588
16	5905167815595
19	5905167815601
20	5905167815618
23	5905167815625
25	5905167815632
26	5905167815649
27	5905167815656
29	5905167815663
30	5905167815670
31	5905167815687
32	5905167815694
39	5905167815700
40	5905167815717
41	5905167816721
42	5905167816738
43	5905167816745
44	5905167816752
45	5905167816769
46	5905167816776
47	5905167816783
48	5905167816790
49	5905167816806
50	5905167816813
52	5905167824337
	12 pcs

CS25

COLOR	1,2 m	2 m
A1	5905167824344	5905167824689
A2	5905167824351	5905167824696
2	5905167824368	5905167824702
3	5905167824375	5905167824719
4	5905167824382	5905167824726
7	5905167824399	5905167824733
9	5905167824405	5905167824740
11	5905167824412	5905167824757
12	5905167824429	5905167824764
14	5905167824436	5905167824771
16	5905167824443	5905167824788
19	5905167824450	5905167824795
20	5905167824467	5905167824801
23	5905167824474	5905167824818
25	5905167824481	5905167824825
26	5905167824498	5905167824832
27	5905167824504	5905167824849
29	5905167824511	5905167824856
30	5905167824528	5905167824863
31	5905167824535	5905167824870
32	5905167824542	5905167824887
39	5905167824559	5905167824894
40	5905167824566	5905167824900
41	5905167824573	5905167824917
42	5905167824580	5905167824924
43	5905167824597	5905167824931
44	5905167824603	5905167824948
45	5905167824610	5905167824955
46	5905167824627	5905167824962
47	5905167824634	5905167824979
48	5905167824641	5905167824986
49	5905167824658	5905167824993
50	5905167824665	5905167825006
52	5905167824672	5905167825013
	12 pcs	12 pcs

CS30

COLOR	0,93 m	1,86 m
A1	5905167799925	5905167800256
A3	5905167799949	5905167800270
2	5905167799963	5905167800294
3	5905167799970	5905167800300
4	5905167799987	5905167800317
7	5905167799994	5905167800324
9	5905167800003	5905167800331
11	5905167800010	5905167800348
12	5905167800027	5905167800355
14	5905167800041	5905167800379
16	5905167800058	5905167800386
19	5905167800065	5905167800393
20	5905167800072	5905167800409
23	5905167800096	5905167800423
25	5905167800102	5905167800430
26	5905167800119	5905167800447
27	5905167800126	5905167800454
29	5905167800140	5905167800478
30	5905167800157	5905167800485
31	5905167800164	5905167800492
32	5905167800171	5905167800508
39	5905167800249	5905167800577
40	5905167805657	5905167805701
41	5905167805664	5905167805718
42	5905167805671	5905167805725
43	5905167805688	5905167805732
44	5905167805695	5905167805749
45	5905167805817	5905167805800
46	5905167815007	5905167815052
47	5905167815014	5905167815069
48	5905167815021	5905167815076
49	5905167815038	5905167815083
50	5905167815045	5905167815090
52	5905167824313	5905167830192
	12 pcs	12 pcs

CS37

COLOR	0,93 m
A1	5905167769249
A2	5905167769256
A3	5905167769263
2	5905167769287
3	5905167769294
4	5905167769300
7	5905167769317
9	5905167769331
11	5905167769348
12	5905167769355
14	5905167769379
16	5905167769386
19	5905167769393
20	5905167769409
23	5905167769423
25	5905167769447
26	5905167769454
27	5905167769461
29	5905167769485
30	5905167769492
31	5905167769508
32	5905167769515
39	5905167769324
40	5905167805558
41	5905167805565
42	5905167805572
43	5905167805589
44	5905167805596
45	5905167805824
46	5905167814956
47	5905167814963
48	5905167814970
49	5905167814987
50	5905167814994
52	5905167824306
	12 pcs

PRO SYSTEM

Professional solutions
has never been so easy

ELEGANT, PRECISE SOLUTION

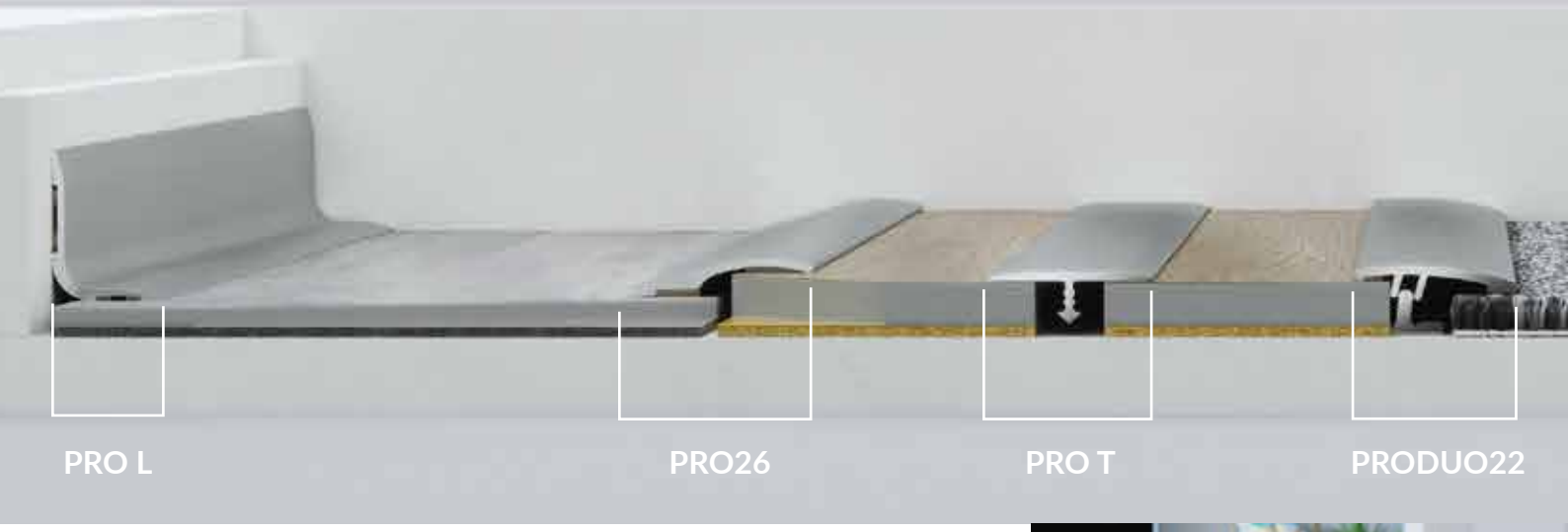

This offer is for the most demanding customers. If you are looking for a professional solutionat its best style.

The PRO SYSTEM offer includes precise and elegant solutions of the most common problems.

In PRO SYSTEM you will find the perfect masking of 10mm LVT / RIGID dilatation or aesthetic connection of a hard floor with a carpet.

7 selected shapes - Professional solutions has never been so easy.

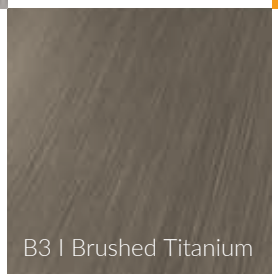

UNIVERSAL, MODERN COLORS

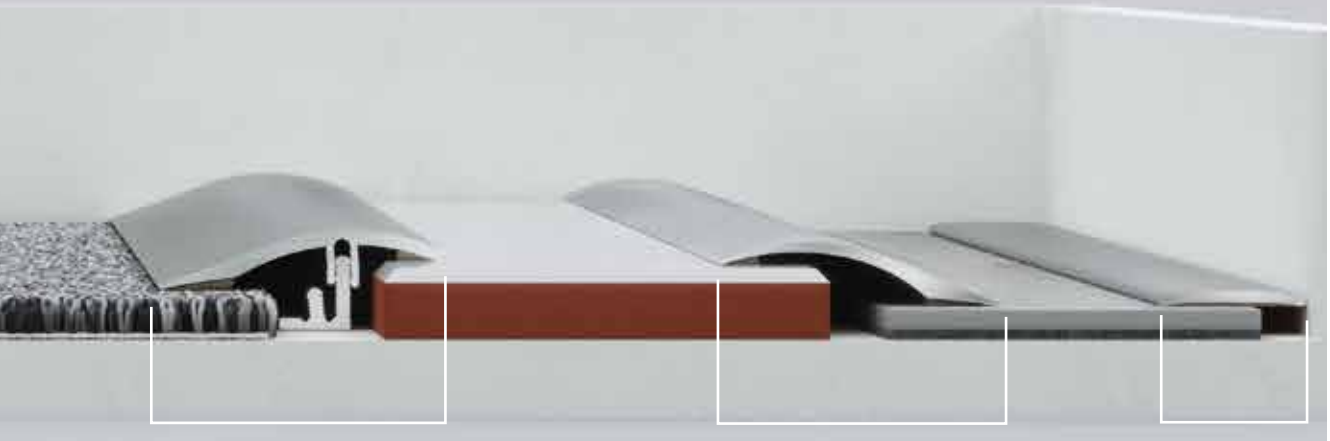

MINIMUM STOCK, MAXIMUM ROTATION 7 SHAPES IN 2 COLORS

PRO SYSTEM are specially designed profiles.

All it takes is 7 shapes to satisfy even the most demanding clients.

Professional solution has never been so easy.

PRO SYSTEM

PRO20

DILATATION
OR FINISHING

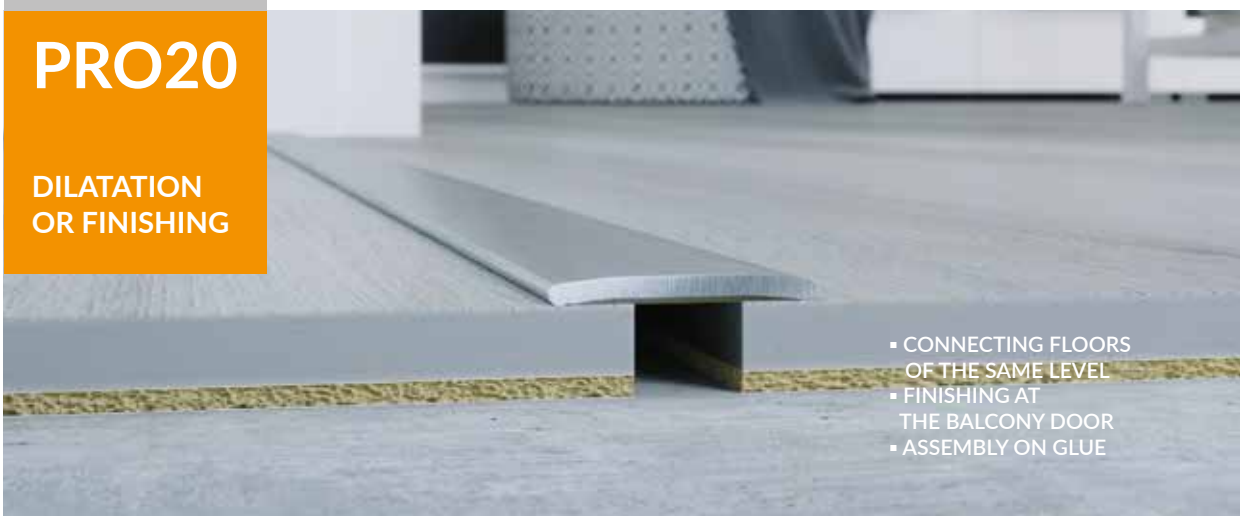

- CONNECTING FLOORS OF THE SAME LEVEL
- FINISHING AT THE BALCONY DOOR
- ASSEMBLY ON GLUE

PRO T

DILATATION

- CONNECTING FLOORS OF THE SAME LEVEL
- ASSEMBLY ON GLUE

PRO DUO22

CONECTION
WITH CARPET

- CONECTION WITH CARPET AT THE SAME LEVEL
- TWO-PARTS SOLID INSTALLATION SYSTEM
- ASSEMBLY ON GLUE OR SCREWS

PRO26

LEVELING
UP TO 6MM

- CONNECTING FLOORS WITH SMALL LEVEL DIFFERENCE
- ASSEMBLY ON GLUE

PRO38

LEVELING
UP TO 16 MM

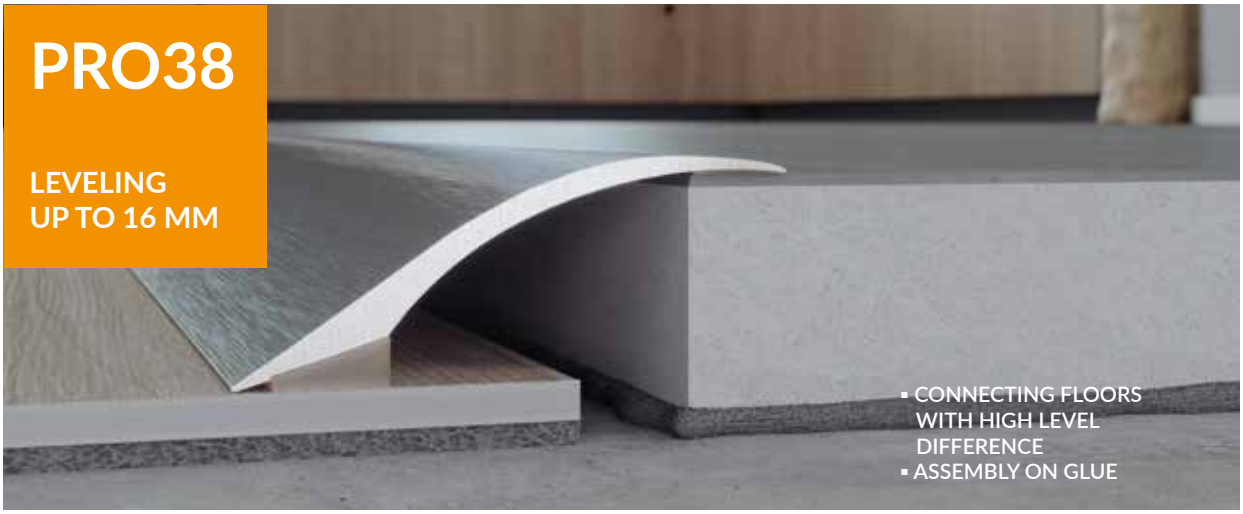

- CONNECTING FLOORS WITH HIGH LEVEL DIFFERENCE
- ASSEMBLY ON GLUE

PRO DUO38

LEVELING
FLOORS

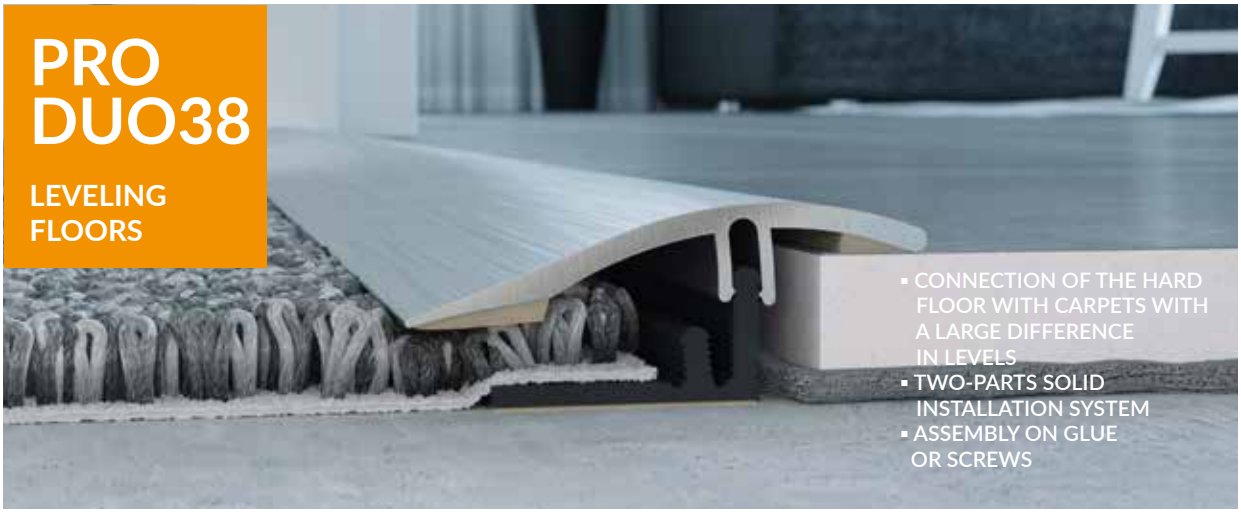

- CONNECTION OF THE HARD FLOOR WITH CARPETS WITH A LARGE DIFFERENCE IN LEVELS
- TWO-PARTS SOLID INSTALLATION SYSTEM
- ASSEMBLY ON GLUE OR SCREWS

PRO L

FINISHING

- FINISHING AT THE BALCONY DOOR OR FURNITURE BASES
- GLUE ASSEMBLY

PRO20

20 mm

GLUE FIX

DIMENSIONS

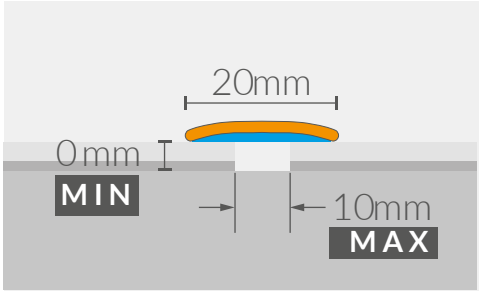

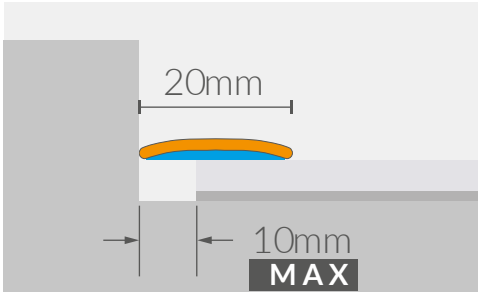

COLORS

		0,93 m	1,86 m
B1		5905167800911	5905167800942
B3		5905167800935	5905167800966
		12 pcs	12 pcs

22 mm

GLUE FIX

PRO T

DIMENSIONS

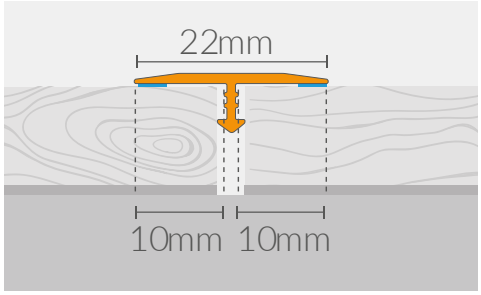

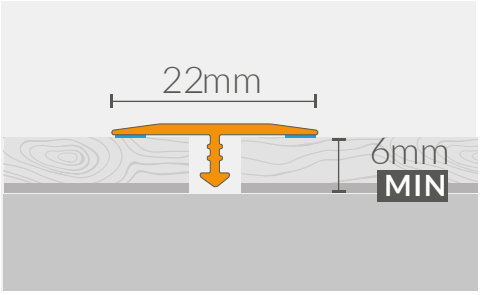

COLORS

		0,93 m	1,86 m
B1		5905167815458	5905167815472
B3		5905167815465	5905167815489
		12 pcs	12 pcs

PRO DUO22

22 mm

DIMENSIONS

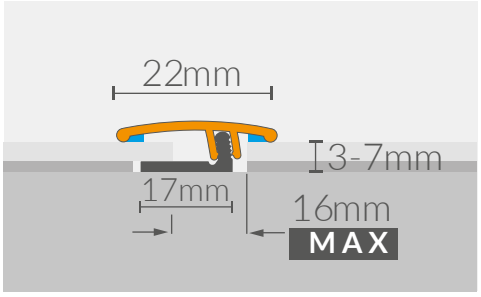

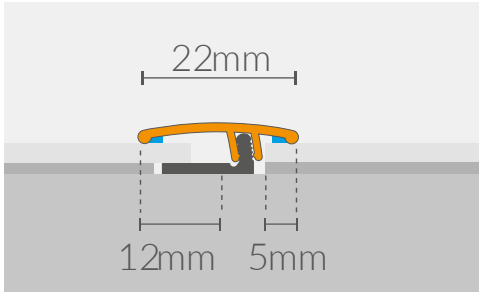

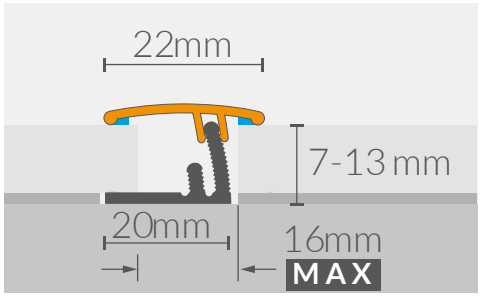

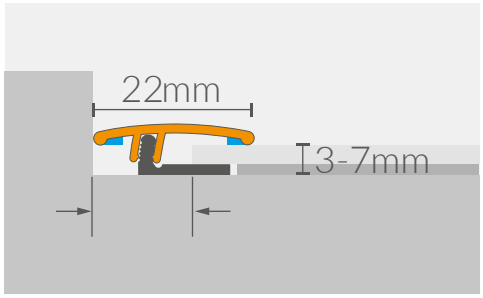

COLORS

		0,93 m	1,86 m
B1		5905167815106	5905167815120
B3		5905167815113	5905167815137
		12 pcs	12 pcs

26 mm

GLUE FIX

PRO26

DIMENSIONS

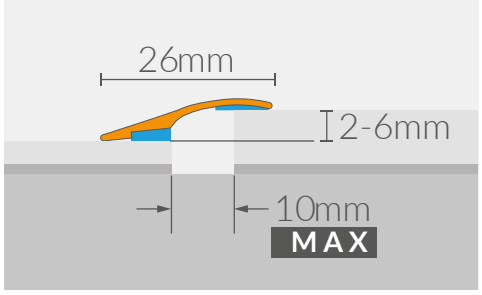

COLORS

	0,93 m	1,86 m
B1	5905167800973	5905167801000
B3	5905167800997	5905167801024
	12 pcs	12 pcs

38 mm

GLUE FIX

DIMENSIONS

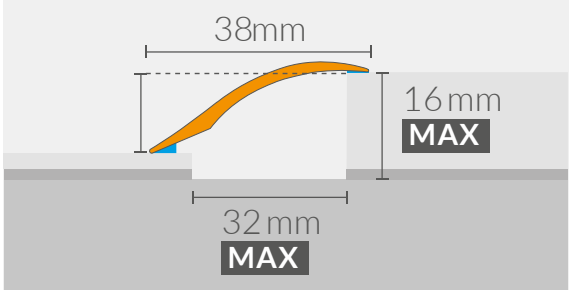

COLORS

		0,93 m	1,86 m
B1		5905167825020	5905167825044
B3		5905167825037	5905167825051
		12 pcs	12 pcs

38 mm

PRO DUO38

DIMENSIONS

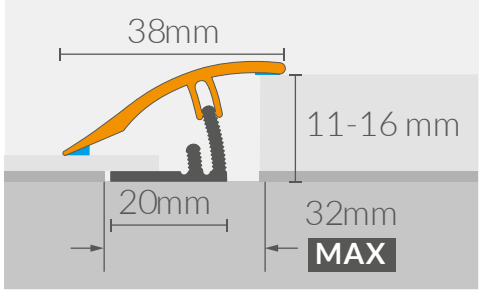

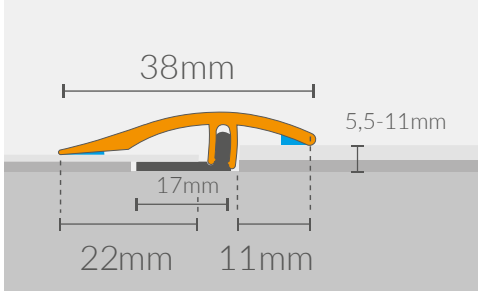

COLORS

		0,93 m	1,86 m
B1		5905167815144	5905167801109
B3		5905167815151	5905167815168
		12 pcs	12 pcs

PRO L

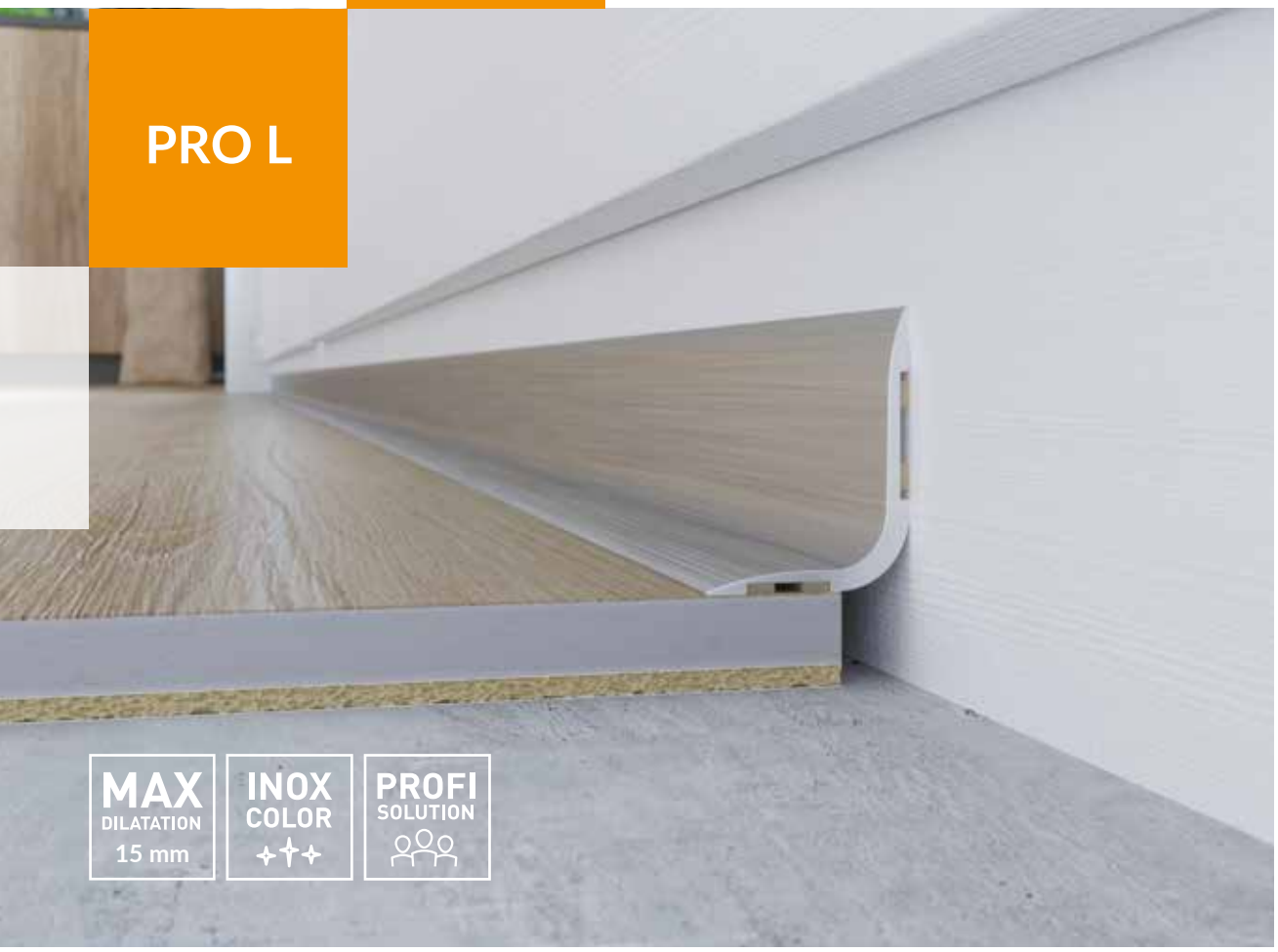

20 mm

GLUE FIX

DIMENSIONS

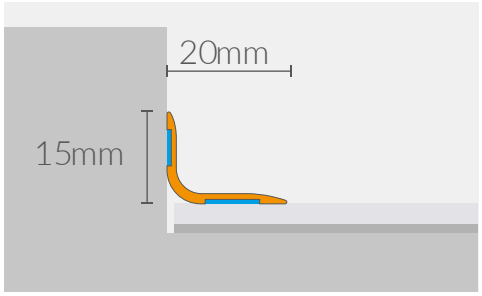

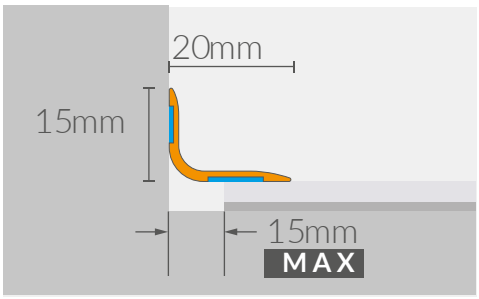

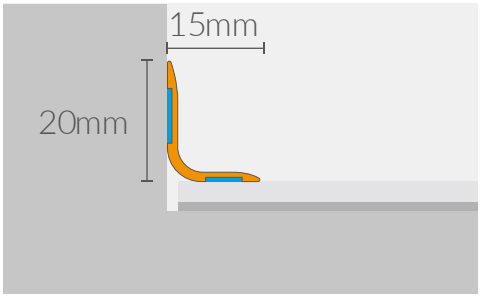

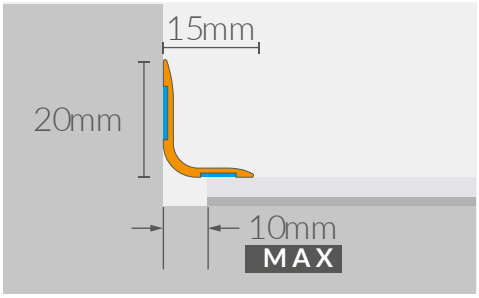

COLORS

		0,93 m	1,86 m
B1		5905167801048	5905167801031
B3		5905167801062	5905167801055
		12 pcs	12 pcs

NOW
YOU'RE
COOKING!

COMPLEMENTARY OFFER

DILATATION PROFILES

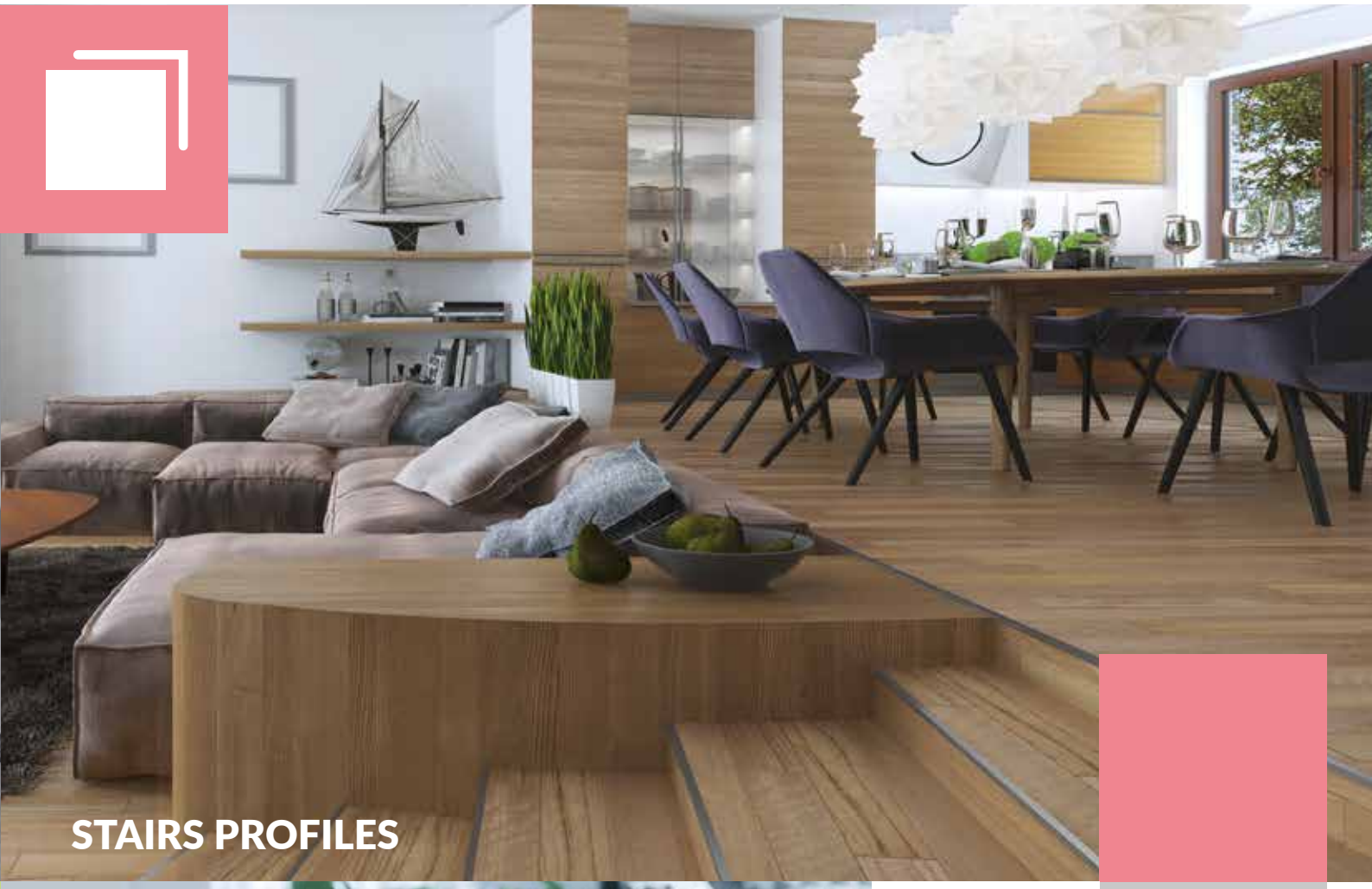

STAIRS PROFILES

LEVELING PROFILES

T16

16 mm

GLUE FIX

DIMENSIONS

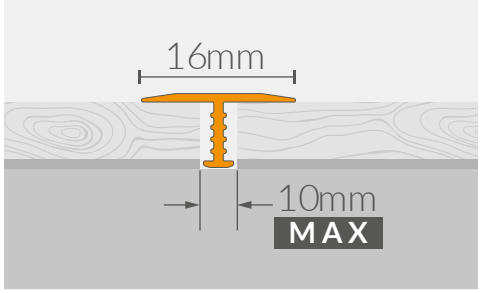

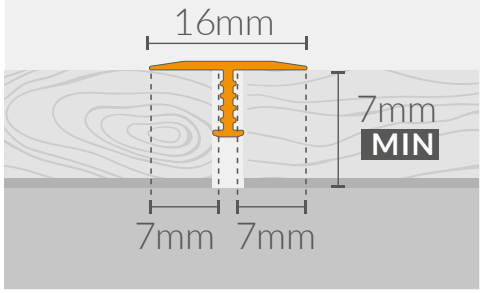

COLORS

		1,00 m	2,00 m
A1		5905167768327	5905167768471
A2		5905167768334	5905167768488
A3		5905167768341	5905167768495
W1		5905167768358	5905167768501
W2		5905167768365	5905167768518
W3		5905167768372	5905167768525
W4		5905167768419	5905167768563
		12 pcs	12 pcs

		1,00 m	2,00 m
W5		5905167768396	5905167768549
W6		5905167768402	5905167768556
W8		5905167768426	5905167768570
W9		5905167768433	5905167768587
W10		5905167768440	5905167768594
W11		5905167768457	5905167768600
W25		5905167768389	5905167768532
W27		5905167768464	5905167768617
		12 pcs	12 pcs

16 mm

GLUE FIX

DIMENSIONS

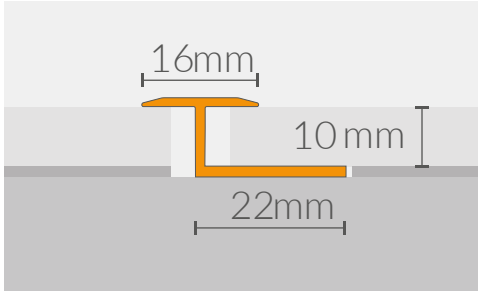

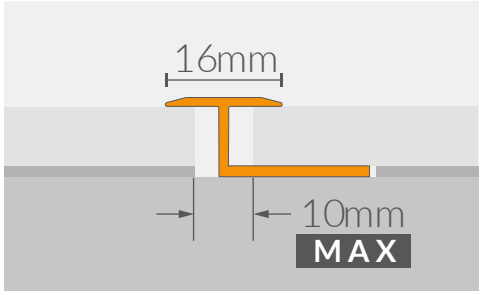

COLORS

	2,50 m
W1	5905167677056
W2	5905167677049
W3	5905167677063
W4	5905167768631
W5	5905167677025
W6	5905167685266
W8	5905167685259
	4 pcs

	2,50 m
W9	5905167353424
W10	5905167677087
W11	5905167685273
W25	5905167768624
W27	5905167768648
	4 pcs

SM1

DIMENSIONS

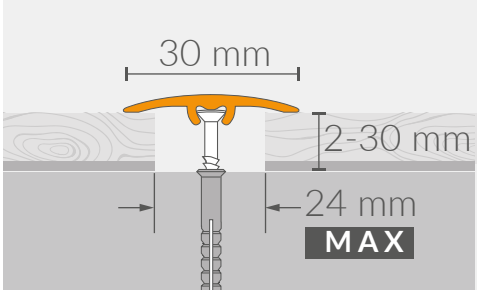

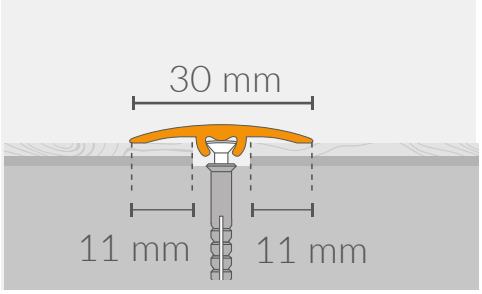

COLORS

	0,93 m	1,86 m	2,79 m
A1	5905167035818	5905167035610	5906735611823
A2	5905167035825	5905167035627	5906735611830
A3	5905167686317	5905167686324	5905167686331
W1	5905167674734	5905167674819	-
W2	5905167674727	5905167674802	-
W3	5905167674741	5905167674826	-
W4	5905167768150	5905167768181	-
W5	5907749015508	5907749015539	-
	12 pcs	4 pcs	4 pcs

	0,93 m	1,86 m	2,79 m
W6	5905167684436	5905167684450	-
W8	5905167684429	5905167684443	-
W9	5906735624472	5906735624489	-
W10	5905167674765	5905167674840	-
W11	5907749024326	5907749024340	-
W25	5905167768143	5905167768174	-
W27	5905167768167	5905167768198	-
	12 pcs	4 pcs	-

30 mm

SCREW FIX

DIMENSIONS

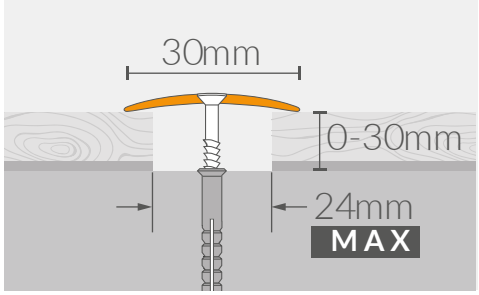

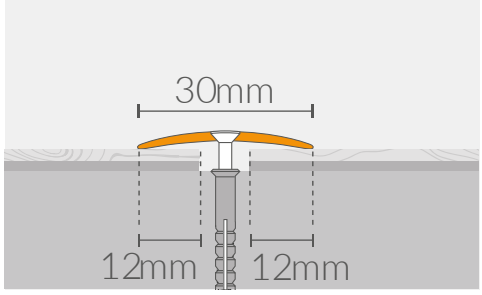

COLORS

	0,93 m	1,86 m
A1	5906735611175	5906735611205
A2	5906735611182	5906735611212
A3	5905167686515	5905167686522
	12 pcs	4 pcs

PR3K

30 mm

GLUE FIX

DIMENSIONS

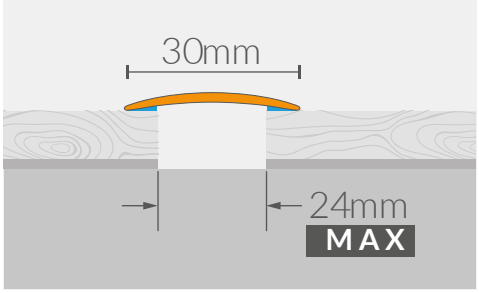

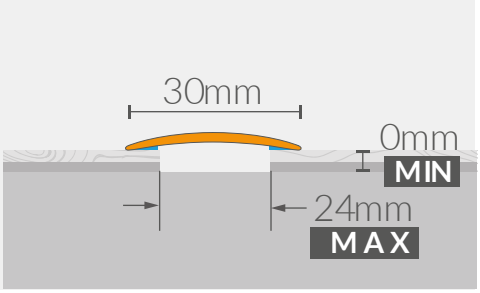

COLORS

		0,93 m	1,86 m
A1		5906735611267	5906735611298
A3		5905167689455	5905167689462
W1		5905167675212	5905167675298
W2		5905167675205	5905167675281
W3		5905167675229	5905167675304
W4		5905167766446	5905167766477
W5		5905167675182	5905167675267
		12 pcs	4 pcs

		0,93 m	1,86 m
W6		5905167684566	5905167684597
W8		5905167684559	5905167684580
W9		5906735624236	5906735624243
W10		5905167675243	5905167675328
W11		5905167684542	5905167684573
W25		5905167766439	5905167766460
W27		5905167766453	5905167766484
		12 pcs	4 pcs

38 mm

SCREW FIX

PR8

DIMENSIONS

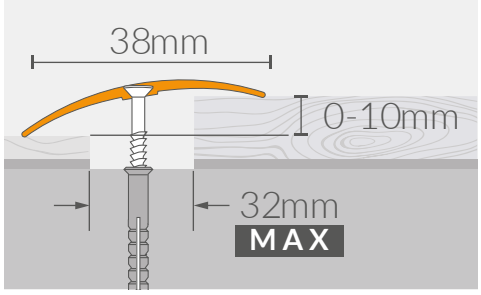

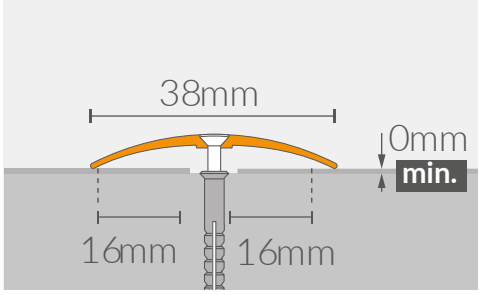

COLORS

	0,93 m	1,86 m
A1	5905167767696	5905167767726
A2	5905167767702	5905167767733
A3	5905167767719	5905167767740
	12 pcs	4 pcs

SM2

41 mm

SCREW FIX

DIMENSIONS

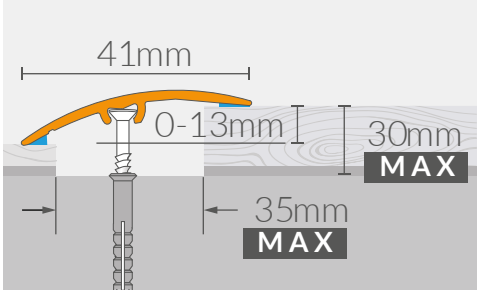

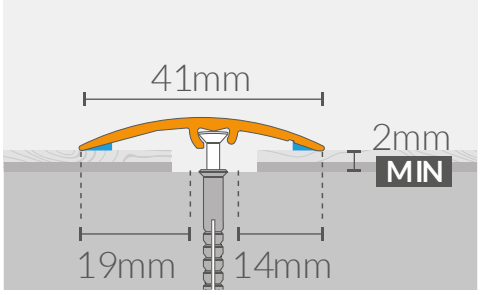

COLORS

	0,93 m	1,86 m	2,79 m
A1	5905167033814	5905167033616	5906735612035
A2	5905167033821	5905167033623	5906735612042
A3	5905167686348	5905167686355	5905167686362
W1	5905167674970	5905167675052	5905167788141
W2	5905167674963	5905167675045	5905167788158
W3	5905167674987	5905167675069	5905167788165
W4	5905167768211	5905167768242	5905167788172
W5	5907749015591	5907749015621	5905167788189
	12 pcs	4 pcs	4 pcs

	0,93 m	1,86 m	2,79 m
W6	5905167684498	5905167684511	5905167788196
W8	5905167684481	5905167684504	5905167788202
W9	5906735625318	5906735625325	5905167788219
W10	5905167675007	5905167675083	5905167788226
W11	5907749024388	5907749024401	5905167788233
W25	5905167768204	5905167768235	5905167788240
W27	5905167768228	5905167768259	5905167788257
	12 pcs	4 pcs	4 pcs

47 mm

SCREW FIX

SM3

DIMENSIONS

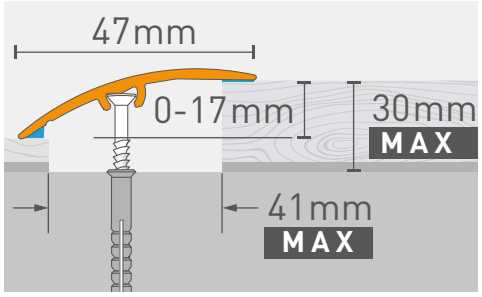

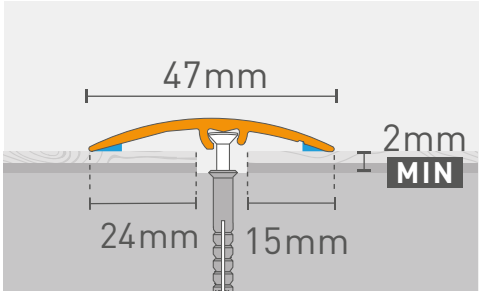

COLORS

	0,93 m	1,86 m	2,79 m
A1	5905167036815	5905167033616	5906735626902
A2	5905167036822	5905167033623	5906735626957
A3	5905167686379	5905167686355	5905167686393
W1	5905167675694	5905167675052	-
W2	5905167675687	5905167675045	-
W3	5905167675700	5905167675069	-
W4	5905167768273	5905167768242	-
W5	5907749015683	5907749015621	-
	12 pcs	4 pcs	4 pcs

	0,93 m	1,86 m	2,79 m
W6	5905167684733	5905167684511	-
W8	5905167684726	5905167684504	-
W9	5906735625431	5906735625325	-
W10	5905167675724	5905167675083	-
W11	5907749024449	5907749024401	-
W25	5905167768266	5905167768235	-
W27	5905167768280	5905167768259	-
	12 pcs	4 pcs	4 pcs

PR4

48 mm

SCREW FIX

DIMENSIONS

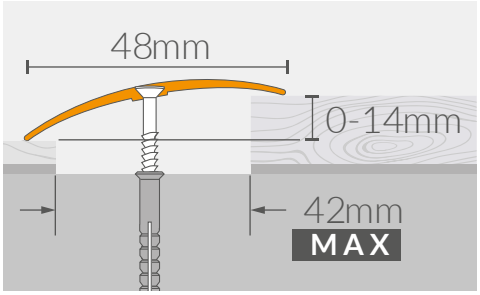

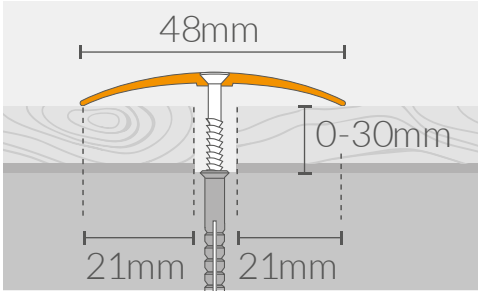

COLORS

	0,93 m	1,86 m
A1	5906735611366	5906735611397
A2	5906735611373	5906735611403
A3	5905167686546	5905167686553
	12 pcs	4 pcs

70 mm

SCREW FIX

PR10

DIMENSIONS

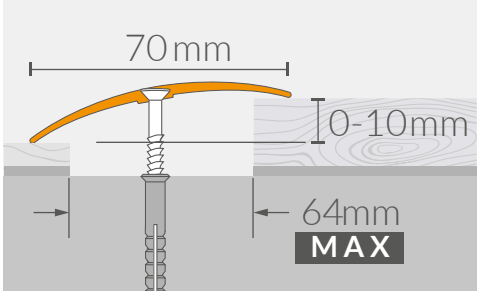

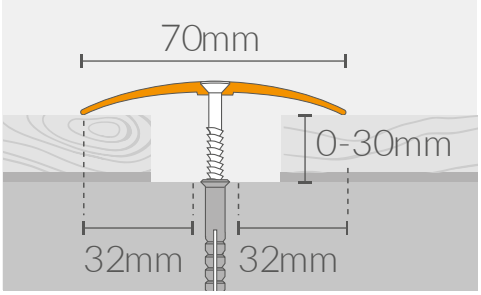

COLORS

	0,93 m	1,86 m
A1	5905167767788	5905167767818
A2	5905167767795	5905167767825
A3	5905167767801	5905167767832
	8 pcs	4 pcs

CS2

25 mm

GLUE FIX

DIMENSIONS

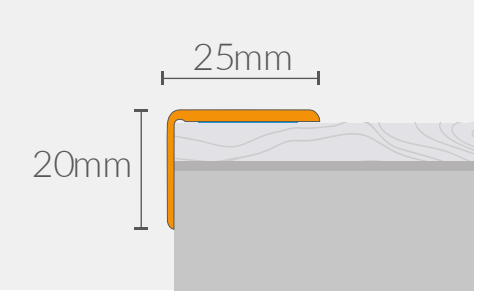

COLORS

	1,20 m
A1	5905167769577
A2	5905167769584
A3	5905167769591
01	5905167769607
02	5905167769614
03	5905167769621
	4 pcs

	1,20 m
04	5905167769638
09	5905167769669
26	5905167769782
29	5905167769812
30	5905167769829
31	5905167769836
	4 pcs

25 mm

SCREW FIX

DIMENSIONS

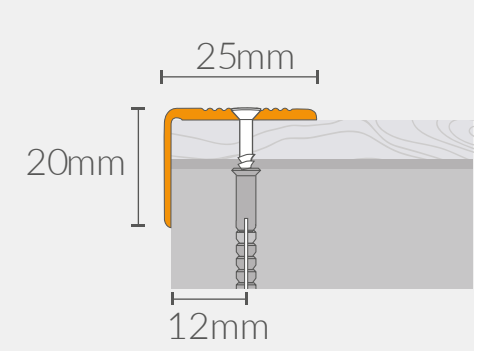

COLORS

		1,20 m
A1		5905167767962
A3		5905167767986
		4 pcs

PS8

20 mm

GLUE FIX

DIMENSIONS

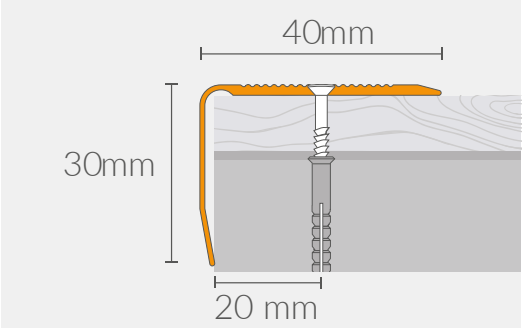

COLORS

		1,20 m
A1		5905167768020
A3		5905167768044
		4 pcs

46 mm

SCREW FIX

PS6

DIMENSIONS

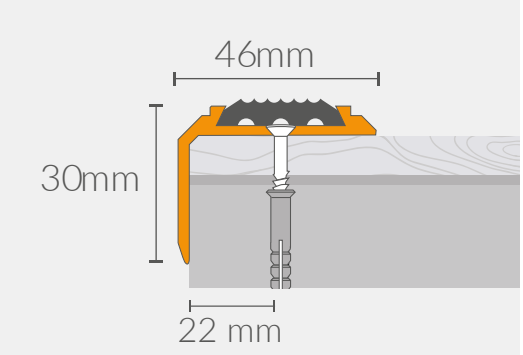

COLORS

		1,20 m
A1		5905167768082
A3		5905167768105
		4 pcs

COLOR SYSTEM

COLOR AVAILABLE IN COLOR SYSTEM CS22*, CS25*, CS30*, CS37 (*NOT AVAILABLE IN GOLD)

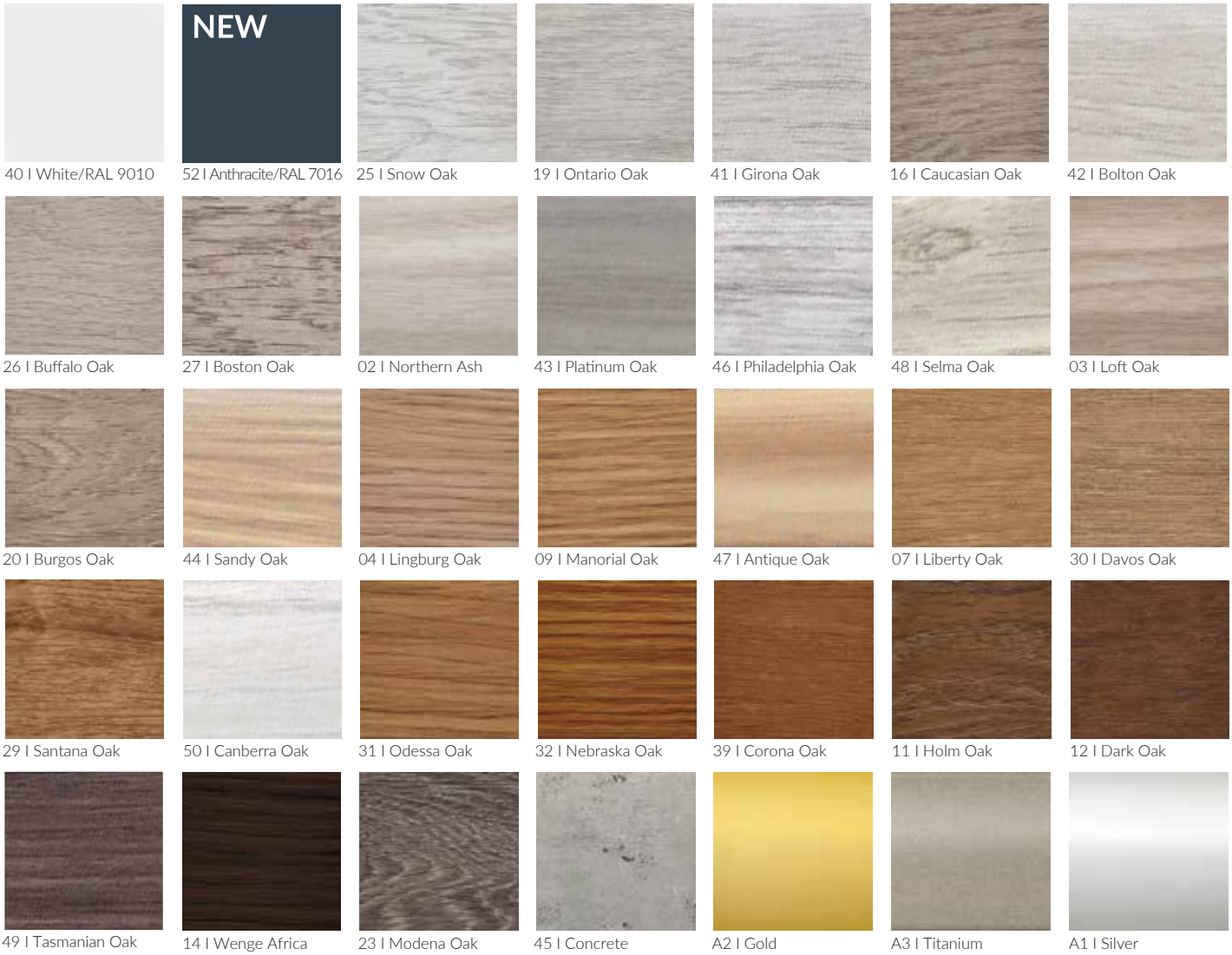

COLOR AVAILABLE IN SM1, PR3K, T16, FL1, SM2, SM3

W25 I Snow Oak

W1 I White Oak

W27 I Boston Oak

W2 I Cappucino Oak

W3 I Silver Oak

W4 I Lingburg Oak

W5 I Noble Oak

W6 I Board Oak

W8 I Antique Oak

W9 I Golden Walnut

W10 I Smoked Oak

W11 I American Walnut

A2 I Gold

A3 I Titanium

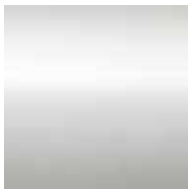
A1 I Silver

COLOR AVAILABLE PR3, PR8, PR4, PR10, PS2, PS8, PS6

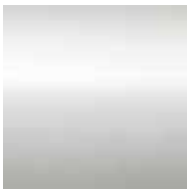
A1 I Silver

A2 I Gold

A3 I Titanium

COLOR AVAILABLE IN PRO SYSTEM

B1 I Brushed Silver

B3 I Brushed Titanium

NOTE

CHECK OUR COMPLEMENTARY PRODUCTS:

The catalogue is a free of charge presentation of products of Decora S.A. and acc. to valid law it is not a commercial offer. Colors and textures of the products in pictures may differ from real ones because of limited printing technologies. Decora S.A. reserves its right to alter availability of the products on some markets and at some distributors. The products included in the catalogues do not pose a complete offer of Decora S.A.

FIND US!

YouTube ARBITON

Arbiton FLOOR EXPERT

Decora S.A., ul. Prądzyńskiego 24a, 63-000 Środa Wielkopolska, Polska,
tel.: +48 61 28 64 200 fax: +48 61 28 54 975
e-mail: sales@decora.pl, www.arbiton.com

version 01/2020